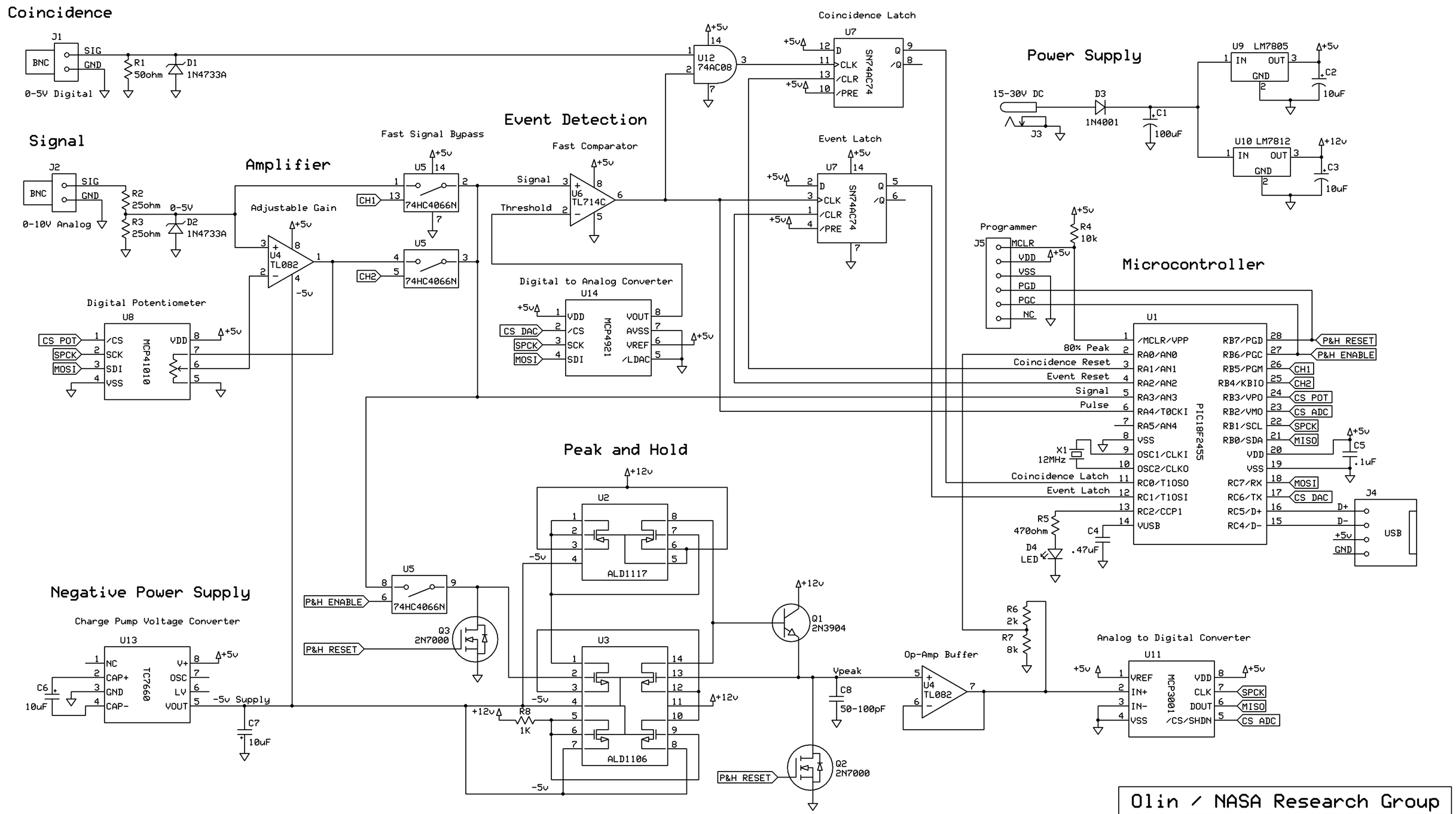

Olin / NASA Research Group		
Multi-Channel Analyzer		
Raphael Cherney	Rev 1.7 7/20/2009	Page 1